GOLDEN
Elegant lighting for everyday living

INSTALLATION INSTRUCTIONS

Fixture Name: Zura 5010-M3/D5/6/9 MW

For Chandelier Light Fixture

WARNING! SHUT POWER OFF AT FUSE OR CIRCUIT BREAKER

HANGING THE FIXTURE（Fig.1）

1. Carefully remove the new fixture from the carton and the yellow bag that holds all parts. Check that all parts are included as shown in the illustration and parts list.
2. Shut off the power at the circuit breaker and remove old fixture from ceiling, including the old mounting strap.
3. The Mounting Strap (B) contains several pairs of threaded holes, find the pair of holes that match the holes spacing in your fixture Canopy (D) and thread the two Fixture Mounting Screws (A) half way into the Fixture Mounting Strap (B).
4. Attach the Fixture Mounting Strap (B) to the Junction Box using the two Mounting Screws (C). Tighten the Screws (C) securely with screwdriver.
5. Determine correct length of rod needed for hanging height. Thread wires over rod and canopy. Screw the rod on the body and canopy.

CONNECTING THE WIRES (Fig.2)

6. Attach the power supply wires to the fixture lead wires by connecting BLACK to BLACK (or SMOOTH) and WHITE to WHITE (or RIBBED).
7. Attach the GROUND wire (GREEN or COPPER) from the Junction Box and the fixture Ground wire to the green Ground Screw on the Mounting Bracket (B) or connect both wires together using the correct size of wire connectors.

NOTE: Twist the wires together in the same direction you twist the wire connector onto the wires.

8. Tuck these wire connections neatly into the Junction Box.

FINISHING THE INSTALLATION (Fig.3)

9. Raise Canopy (D) to the ceiling and secure in place by tightening the Deco Nut (F).
10. Install the light bulbs and glass shade as per the fixture assembly sheet.

YOUR INSTALLATION IS NOW COMPLETE. TURN POWER ON AT TO THE JUNCTION BOX & TEST THE FIXTURE.

Fig.1

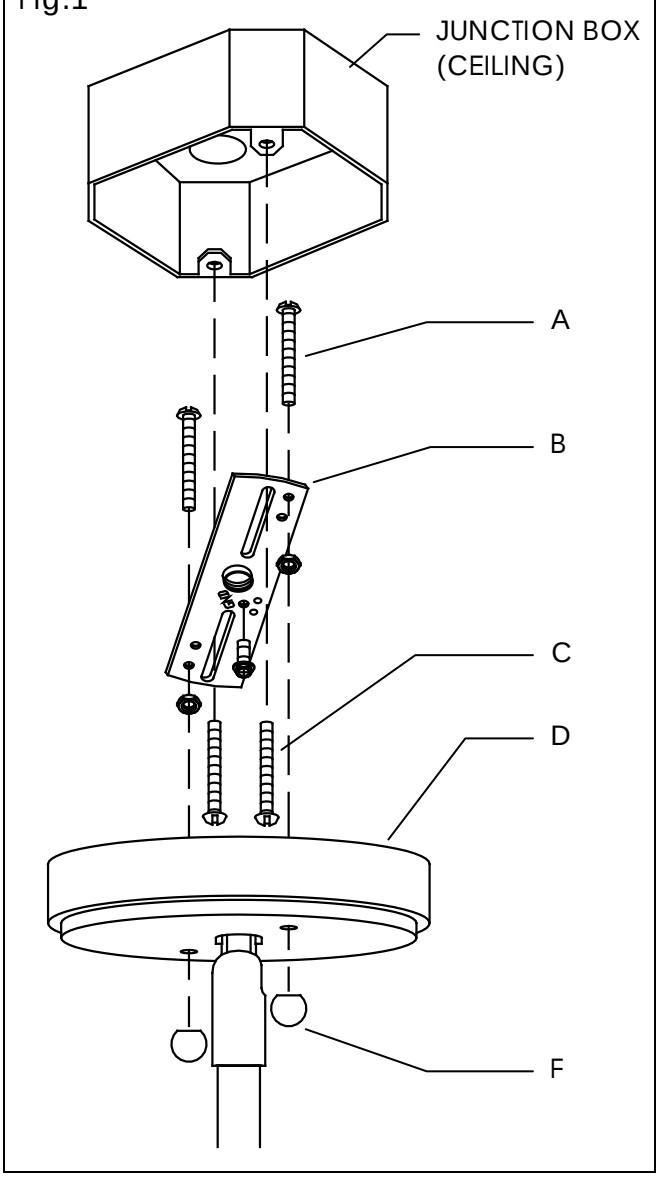

Fig.2

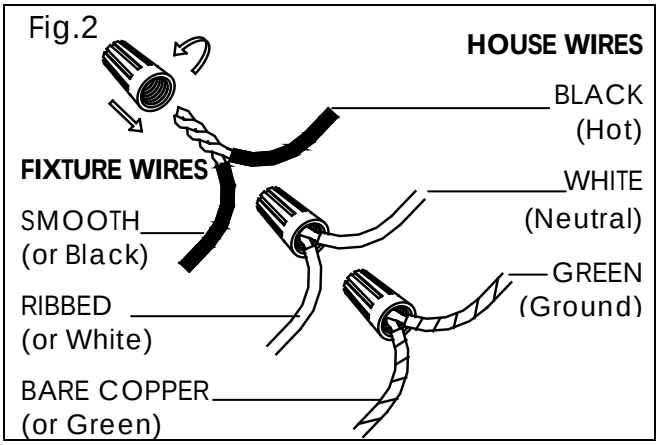

For Customer Service, contact the place of purchase to arrange for replacement parts.

CSA050103HALG1.DOC

GOLDEN
Elegant lighting for everyday living

PARTS & ASSEMBLY SHEET

Fixture Name: Zura 5010-M3/D5/6/9 MW

This fixture assembled PO:_____Date:_____

Notice: Please review the parts listing and check for all parts before assembling the fixture. If any parts are missing or damaged, please note on this sheet and contact the place of purchase to arrange for replacement parts.

PARTS LIST

Company Name:_____Co Account#:_____
below to be filled out by retailer

Mounting Strap W103*T2.0 ㎜ 1ea		Green Screw G8/32*H8 ㎜ 1ea		Mounting Screws H32 ㎜ 2ea H38 ㎜ 2ea	
Wire Connectors Orange 3ea		Hex Nut G5/32*H4 ㎜ 2ea		Deco Nut Φ12 ㎜ 2ea	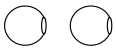

Part Needed _____ Quantity _____

Part Needed _____ Quantity _____

Reason why (missing, scratched, broken glass, bent, bad finish)

Comments _____

FIXTURE ASSEMBLY INSTRUCTIONS

Read and review installation instruction sheet before assembling the fixture

1. By measuring determine correct number of rods needed for proper hanging height.
   * This fixture includes 4 rods (6", 12", 12", 12")
2. To shorten the fixture; slide the excess rods off the wires. To lengthen add additional rods.
3. Pull the fixture's wires through the rods until taut and thread the rods together. Then thread to the fixture coupler (I) at top of fixture and the swivel joint on Canopy. (D)
4. Place the Glass Shade (F) and Small Glass Shade (J) over the Threaded Socket (G).
5. Holding the Small Glass Shade (J), and secure it by threading the Socket Ring (H) onto the Threaded Socket (G) until tight.
6. Install the light bulbs in accordance with the fixture's specification.

(DO NOT EXCEED THE MAXIMUM WATTAGE RATING!)

5010-M3/D5/6/9 MW

Fig.1

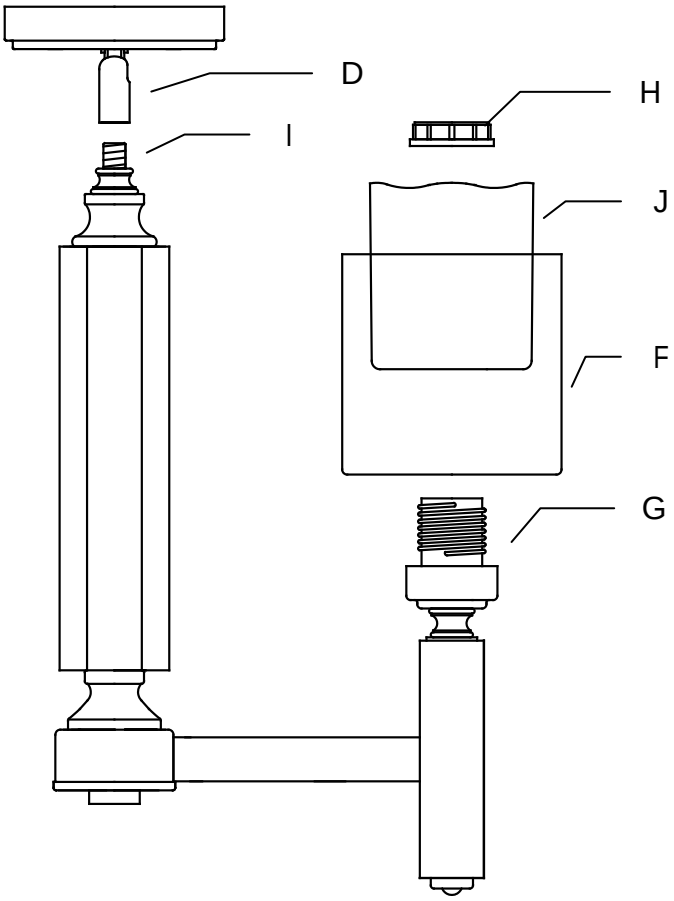

NOTE: INSTALL THE GLASS ASSEMBLY AFTER FIXTURE IS HUNG.

For Customer Service, contact the place of purchase to arrange for replacement parts.