PARTS & ASSEMBLY SHEET

GOLDEN
Elegant lighting for everyday living

Fixture Name: CENTENNIAL 5222-3 PW,CH,ORB and 5663 RBZ

This fixture assembled PO:_____ Date: _____

Notice: Please review the parts listing and check for all parts before assembling the fixture. If any parts are missing or damaged, please note onthis sheet and contact the place of purchase to arrange for replacement parts.

PARTS LIST

Company Name:_____Co. Account #:_____
to be filled out by retailer

Mounting Strap	1ea 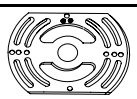	Junction Box Screw	2ea	Mounting Screw	2ea
Wire Connnector	2ea	Hex Nut	2ea	Deco Nut (round nut)	2ea
Green Ground Screw	1ea				

Part Needed _____ Quantity _____

Part Needed _____ Quantity _____

Reason why (missing, scratched, broken glass, bent, bad finish)

Comments _____

FIXTURE ASSEMBLY INSTRUCTIONS

Read and review installation instruction sheet before assembling the fixture.

5222-3 and 5663

Fig 4

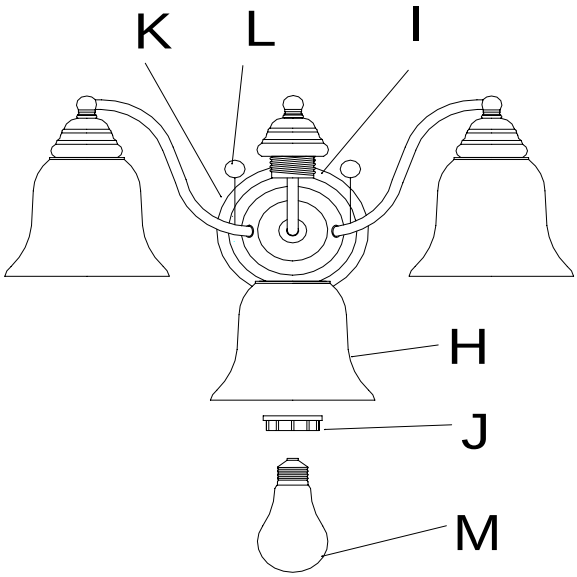

1.Slide the Glass Shade (H) over Socket(I) and secure Glass Shade (H) by threading the Socket Ring(J) to Socket (I) until tight.
2. Install the light bulb in accordance with the fixture's specifications.
(DO NOT EXCEED MAXIMUM WATTAGE RATING!)

NOTE: INSTALL THE GLASS ASSEMBLY AFTER THE FIXTURE IS HUNG.

For Customer Service, contact the place of purchase to arrange for replacement parts.

INSTALLATION INSTRUCTIONS

GOLDEN
Elegant lighting for everyday living

Fixture Name: CENTENNIAL 5222-3 PW,CH,ORB and 5663 RBZ

For Wall Mount Light Fixture

WARNING ! SHUT OFF POWER AT FUSE OR CIRCUIT BREAKER.

HANGING THE FIXTURE (Fig.1)

1. Carefully remove the new fixture from the carton and the yellow bag that holes all your parts. Check that all parts are included as shown in the illustration and parts list.
2. Shut off power at the circuit breaker and remove the old fixture from wall, including the old mounting strap.
3. The Mounting Strap(A) contains several pairs of threaded holes, find the pair of holes that match the holes spacing in your fixture Back Plate(D) and thread the two Mounting Screws(C) half way into the Mounting Strap(A).
4. Place the Mounting Strap(A)over the Junction Box so the Mounting Screws(C) are vertical or horizontal, as required by fixture type.
5. Attach the Mounting Strap(A) to the Junction Box using the two mounting screws(B). Tighten the screws(B) securely with screw driver.

CONNECTING THE WIRES (Fig 2)

6. Attach the power supply wires to the fixture lead wires by connecting BLACK to BLACK (or SMOOTH) and WHITE to WHITE (or RIBBED).
7. Attach the GROUND wire(GREEN or COPPER) from the Junction Box and the fixture Ground wire to the green Ground Screw on the Mounting Bracket (B) or connect both wires together using the correct size of wire connectors.

NOTE: Twist the wires together in the same direction you twist the wire connector onto the wires.

8. Tuck these wire connections neatly into the Junction Box.

FINISHING THE INSTALLATION (Fig.3)

9. After tucking these wire connections neatly into the Junction Box and place the fixture Back Plate(K) over the two Mounting Screws(B) and secure the Back Plate(K) against the wall by threading two Deco Nuts(L) over the two Mounting Screws(B) until snug against the wall.
10. Install the light bulbs and glass shade as per the fixture assembly sheet.

YOUR INSTALLATION IS NOW COMPLETE. RETURN POWER TO THE JUNCTION BOX AND TEST THE FIXTURE.

Fig. 1

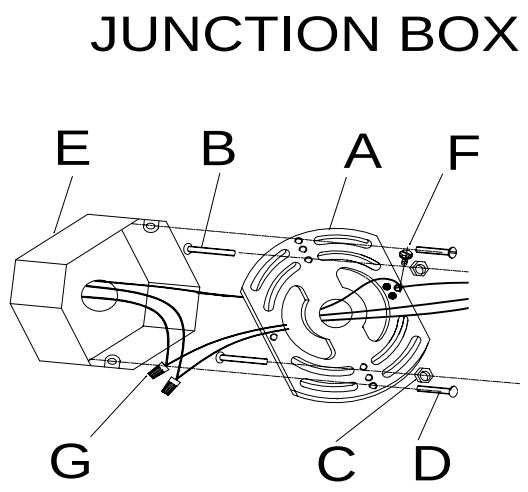

Fig. 2

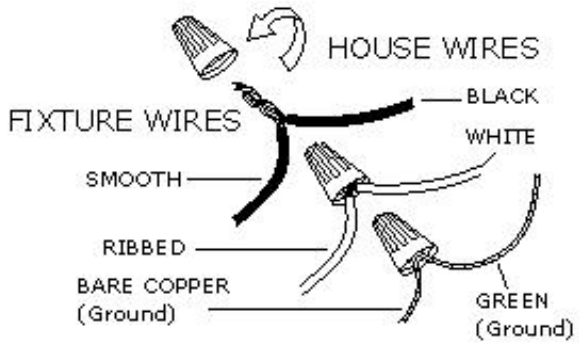

Fig. 3

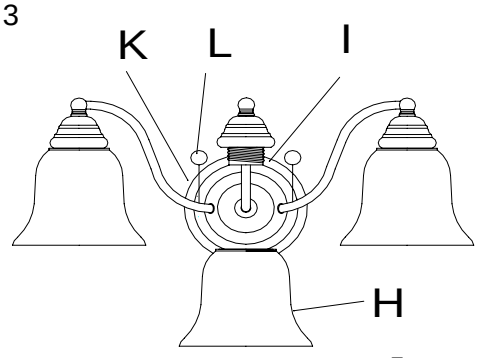

For Customer Service, contact the place of purchase to arrange for replacement parts.