PARTS & ASSEMBLY SHEET

GOLDEN
Elegant lighting for everyday living

Fixture Name: CENTENNIAL 5222-2 PW,CH,ORB and 5662 RBZ

This fixture assembled PO:_____ Date: _____

Notice: Please review the parts listing and check for all parts before assembling the fixture. If any parts are missing or damaged, please note onthis sheet and contact the place of purchase to arrange for replacement parts.

PARTS LIST

Company Name:_____Co. Account #:_____
to be filled out by retailer

Mounting Strap	1ea	Threaded Rod (Nipple)	1ea 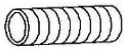	Mounting Screw	2ea
Spring Washer	1ea	Hex Nut	1ea	Deco Nut (round nut)	1ea
Green Ground Screw	1ea	Wire Connnector	2ea		

Part Needed _____ Quantity _____
Part Needed _____ Quantity _____
Reason why (missing, scratched, broken glass, bent, bad finish)
Comments _____

FIXTURE ASSEMBLY INSTRUCTIONS

Read and review installation instruction sheet before assembling the fixture.

5222-2 and 5662

Fig 4

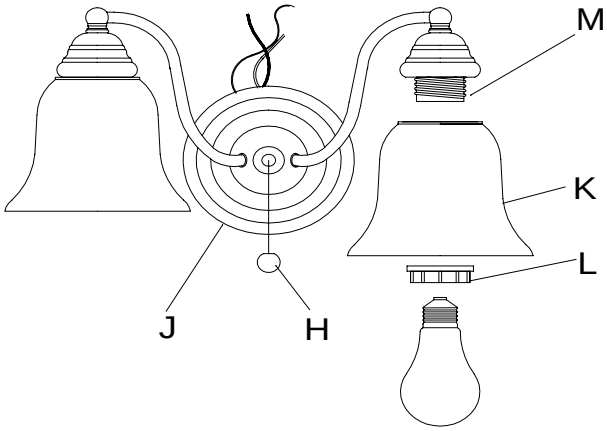

1.Place the Glass Shade(K)over the Socket (M).
2.Holding the Glass Shade(K), place the Socket Ring(L)over the Threaded Socket(M).
3. Secure Glass Shade(K) by threading the Socket Ring(L) onto the Threaded Socket(M) until tight.
4.Install the light bulb in accordance with the fixture's specifications.
(DO NOT EXCEED MAXIMUM WATTAGE RATING!)

NOTE: INSTALL THE GLASS ASSEMBLY AFTER THE FIXTURE IS HUNG.

For Customer Service, contact the place of purchase to arrange for replacement parts.

INSTALLATION INSTRUCTIONS

GOLDEN
Elegant lighting for everyday living

Fixture Name: CENTENNIAL 5222-2 PW,CH,ORB and 5662 RBZ

For Wall Mount Light Fixture

WARNING ! SHUT OFF POWER AT FUSE OR CIRCUIT BREAKER.

HANGING THE FIXTURE (Fig.1)

1. Carefully remove the new fixture from the carton and the yellow bag that holes all your parts. Check that all parts are included as shown in the illustration and parts list.
2. Shut off power at the circuit breaker and remove the old fixture from wall, including the old mounting strap.
3. Thread the Nipple (D) into the Mounting Strap (A). Place Lock Washer (C) over end of Nipple (D) protruding through Mounting Strap (A) and thread Hex Nuts (B) onto Nipple until tight.
4. The Mounting Strap(A) contains several pairs of threaded holes, find the pair of holes that match the holes spacing in your fixture Back Plate(D) and thread the two Mounting Screws(E) half way into the Mounting Strap(A).
5. Place the Mounting Strap(A)over the Junction Box so the Mounting Screws(E) are vertical or horizontal, as required by fixture type and fasten using the two mounting screws (B). Tighten the screws (B) securely with screw driver.

CONNECTING THE WIRES (Fig 2)

6. Attach the power supply wires to the fixture lead wires by connecting BLACK to BLACK (or SMOOTH) and WHITE to WHITE (or RIBBED).
7. Attach the GROUND wire(GREEN or COPPER) from the Junction Box and the fixture Ground wire to the green Ground Screw on the Mounting Bracket (B) or connect both wires together using the correct size of wire connectors. - NOTE:Twist the wires together in the same direction you twist the wire connector onto the wires.
8. Tuck these wire connections neatly into the Junction Box.

FINISHING THE INSTALLATION(Fig.3)

9. Place the fixture Back Plate (J), over the threaded rod, so it protrudes through the hole in the Back Plate (J). Thread the Deco Nut (H) onto the threaded rod and continue turning until the Back Plate(J) is snug against the wall.
10. Install the light bulbs and glass shade as per the fixture assembly sheet.

YOUR INSTALLATION IS NOW COMPLETE. RETURN POWER TO THE JUNCTION BOX AND TEST THE FIXTURE.

Fig. 1

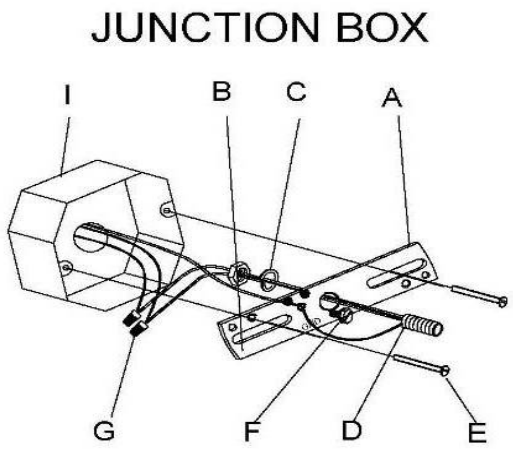

Fig. 1

Fig. 2

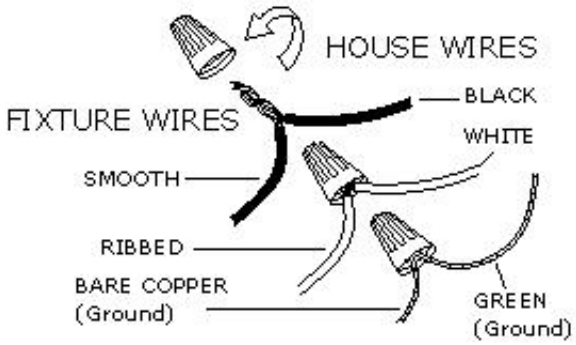

Fig. 3

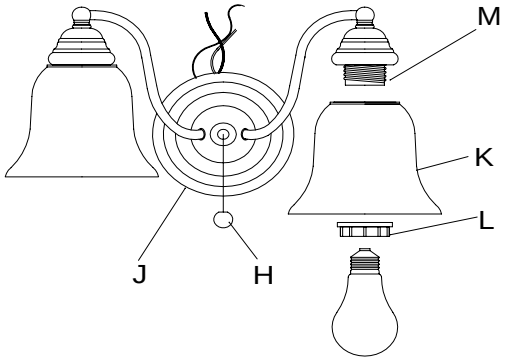

For Customer Service, contact the place of purchase to arrange for replacement parts.